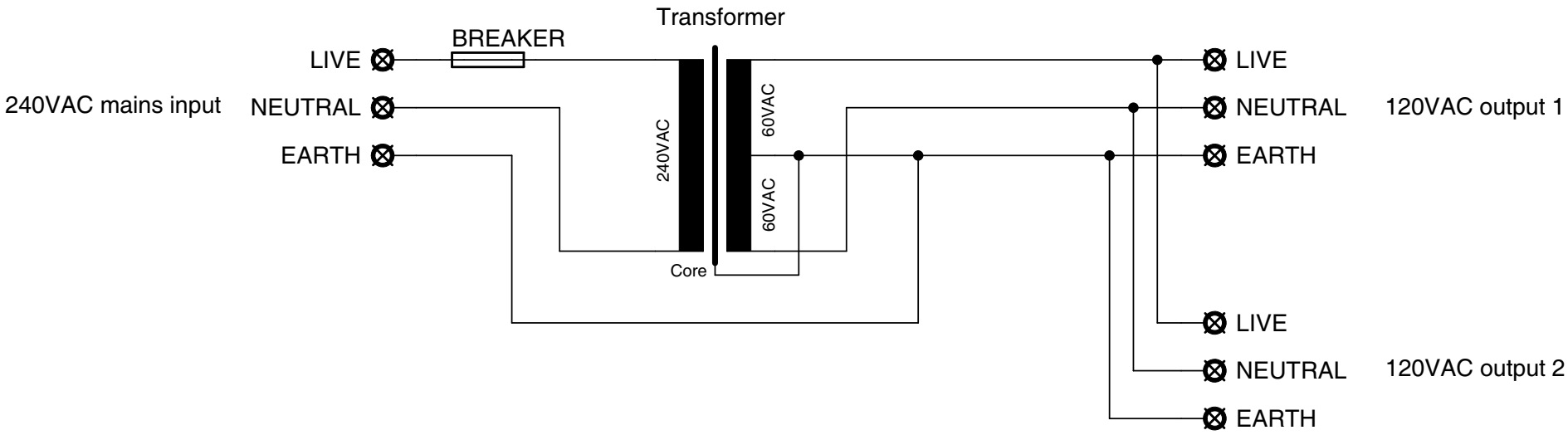
Transformer
BREAKER
LIVE
240VAC mains input
NEUTRAL
EARTH
240VAC
60VAC
60VAC
Core
LIVE
NEUTRAL
EARTH
120VAC output 1
LIVE
NEUTRAL
EARTH
120VAC output 2

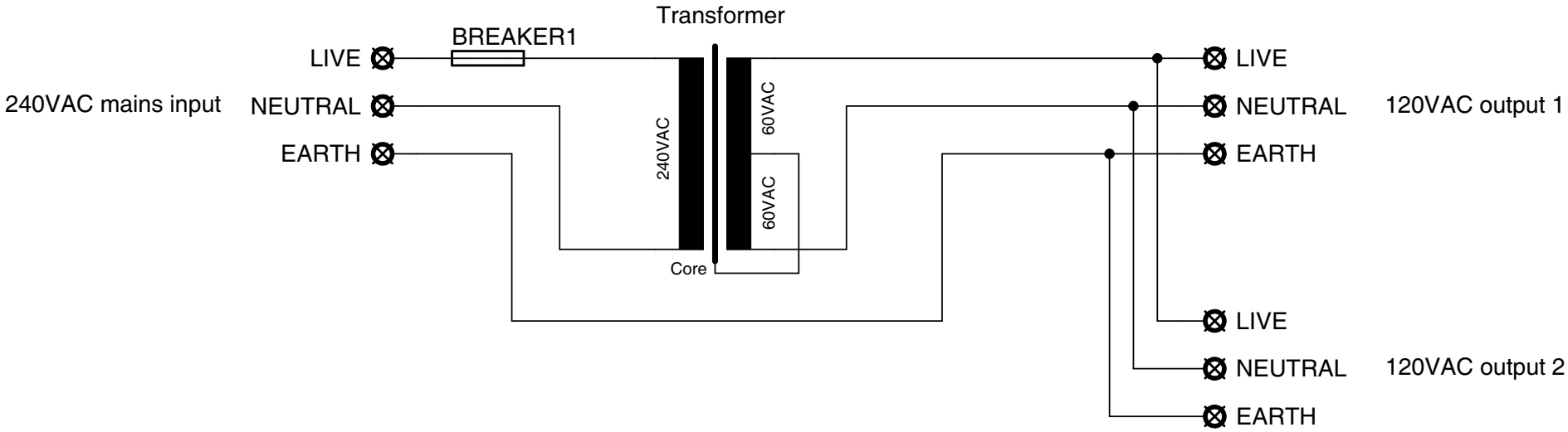
Transformer
BREAKER1
LIVE
240VAC mains input
NEUTRAL
EARTH
240VAC
60VAC
60VAC
Core
LIVE
NEUTRAL
EARTH
120VAC output 1
LIVE
NEUTRAL
EARTH
120VAC output 2