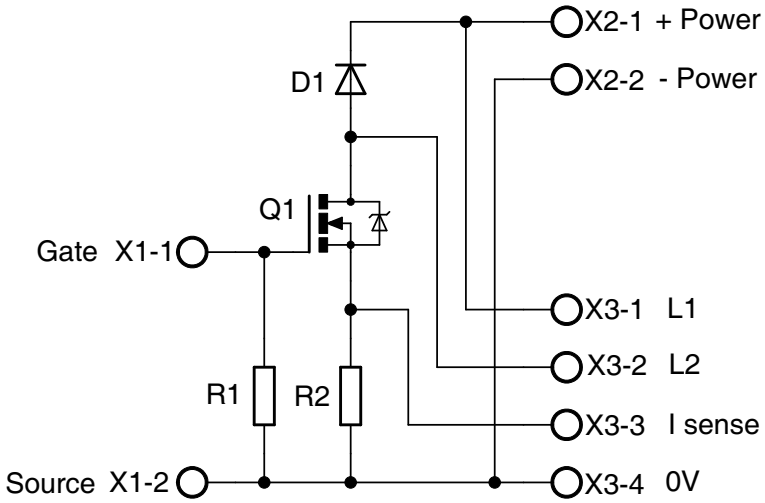
X2-1 + Power
X2-2 - Power
D1
Q1
Gate X1-1
X3-1 L1
X3-2 L2
R1
R2
X3-3 I sense
Source X1-2
X3-4 0V