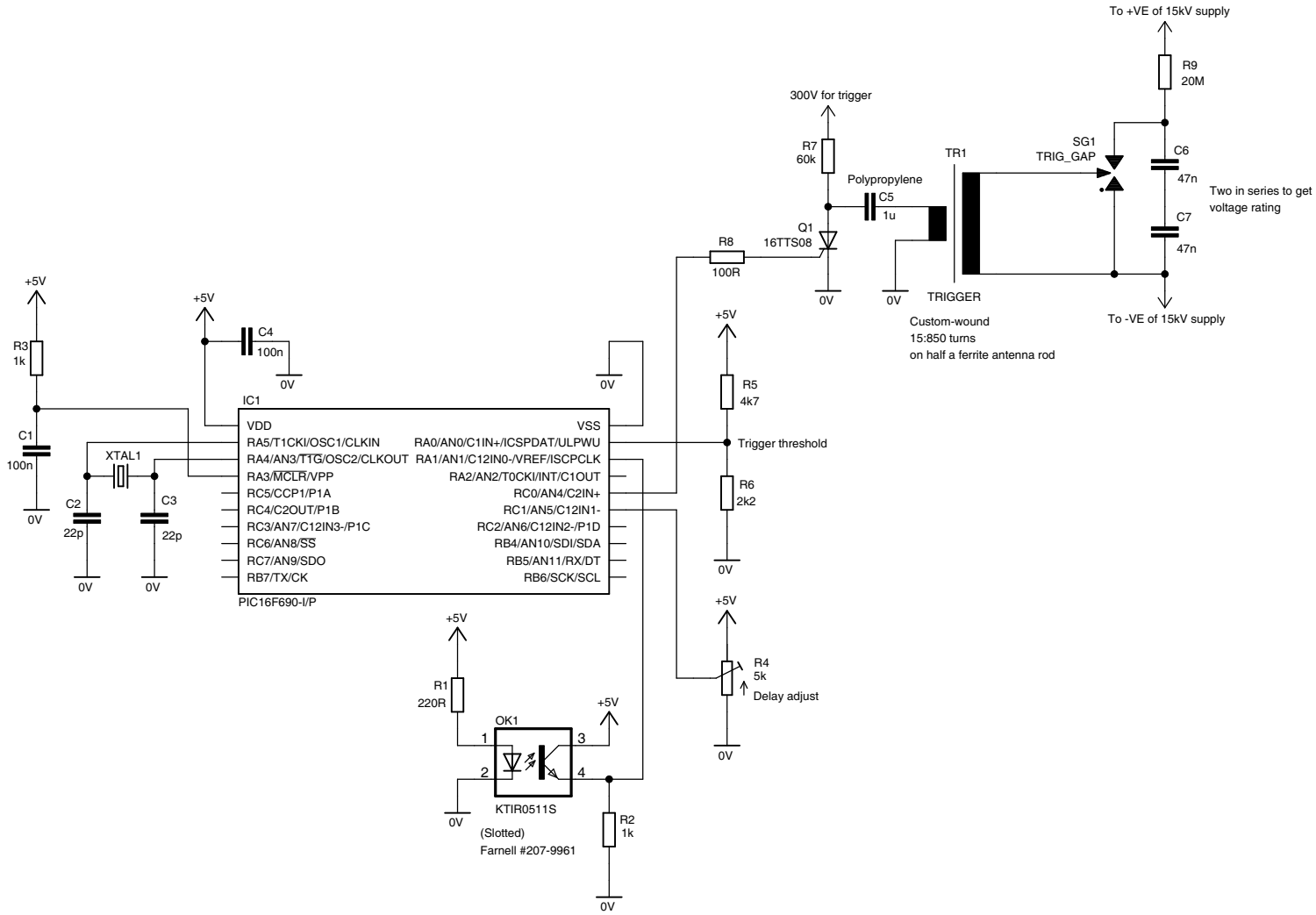
To +VE of 15kV supply
R9
20M
300V for trigger
R7
60k
SG1
TRIG_GAP
TR1
C6
47n
Two in series to get
voltage rating
Polypropylene
C5
1u
C7
47n
Q1
16TTS08
R8
100R
0V
0V
TRIGGER
Custom-wound
15:850 turns
on half a ferrite antenna rod
To -VE of 15kV supply
+5V
R3
1k
+5V
C4
100n
0V
0V
+5V
R5
4k7
IC1
C1
100n
XTAL1
VDD
RA5/T1CKI/OSC1/CLKIN
RA4/AN3/TTG/OSC2/CLKOUT
RA3/MCLR/VPP
RC5/CCP1/P1A
RC4/C2OUT/P1B
RC3/AN7/C12IN3-/P1C
RC6/AN8/SS
RC7/AN9/SDO
RB7/TX/CK
VSS
RA0/AN0/C1IN+/ICSPDAT/ULPWU
RA1/AN1/C12IN0-/VREF/ISCPCLK
RA2/AN2/T0CKI/INT/C1OUT
RC0/AN4/C2IN+
RC1/AN5/C12IN1-
RC2/AN6/C12IN2-/P1D
RB4/AN10/SDI/SDA
RB5/AN11/RX/DT
RB6/SCK/SCL
Trigger threshold
R6
2k2
0V
C2
22p
C3
22p
0V
0V
PIC16F690-I/P
+5V
R4
5k
Delay adjust
0V
+5V
R1
220R
OK1
+5V
1
3
2
4
0V
KTIR0511S
(Slotted)
Farnell #207-9961
R2
1k
0V